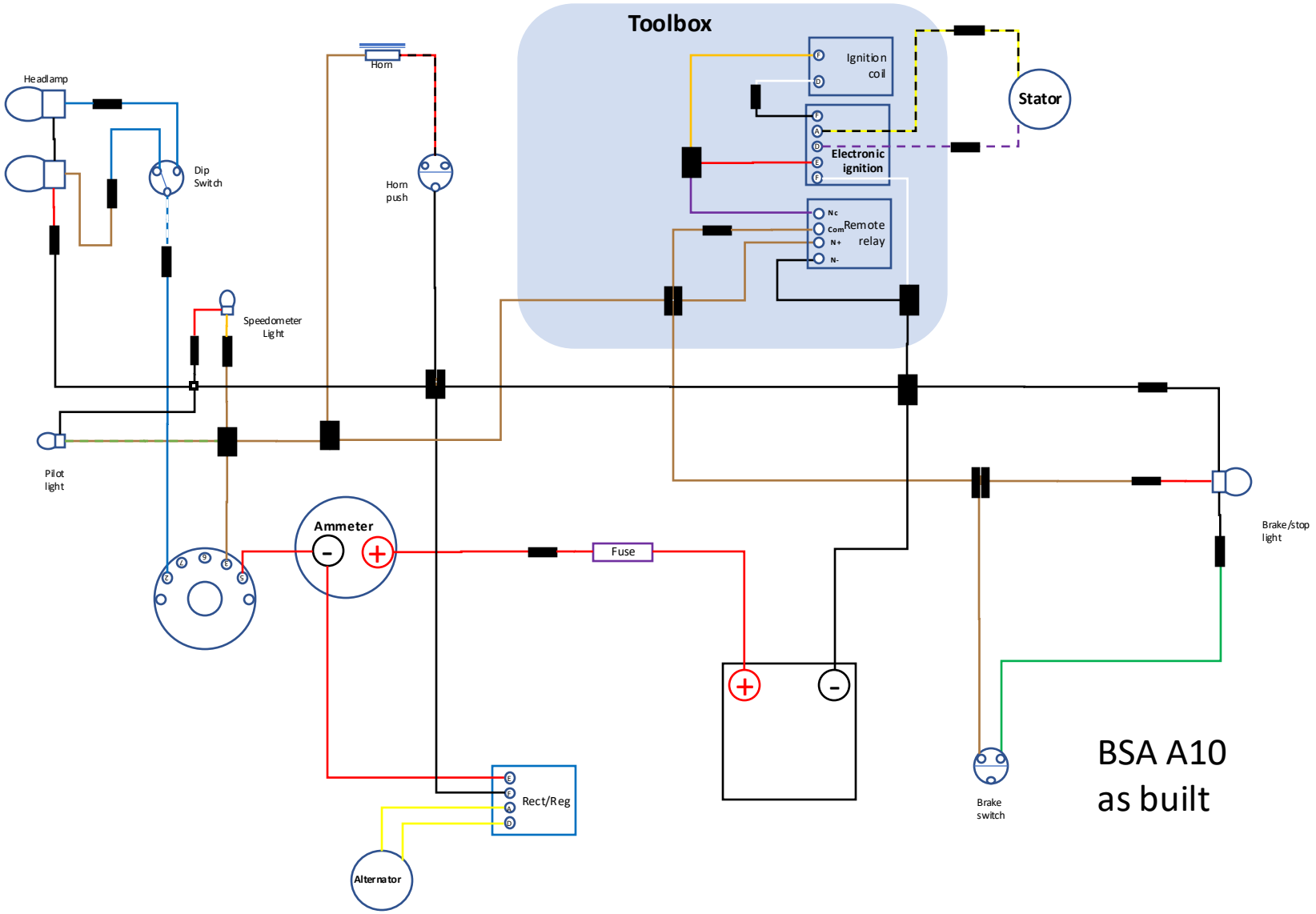
Toolbox
Ignition coil
Stator
Electronic ignition
Remote relay
Nc
Com
N+
N-
Horn
Horn push
Headlamp
Dip Switch
Speedometer Light
Pilot light
Ammeter
Fuse
Brake/stop light
Brake switch
Rect/Reg
Alternator
BSA A10
as built